ZLIM42C

Integrated Open Loop Step Motor Manual(CANOPEN CONTROL)

【Please read the manual in detail before use, to avoid damage to the motor】

Shenzhen ZhongLing Technology Co.,Ltd.

Add: 8th Floor, Building 3, Qiyu Industrial City, Gongle Tiezai Rd., Xixiang St., Bao'an Dist, Shenzhen, China

Postcode: 518102

Tel: +86-0755-2979 9302

Fax: +86-0755-2912 4283

Email: sales@zlingkj.com

Web: www.zlingkj.com

CONTENTS

PREFACE **1**
SAFETY PRECAUTIONS **3**
1. PRODUCT INTRODUCTION **6**
1.1. OUTLINE 6
1.2. FEATURES 6
1.3. APPLICATION 7
2. ELECTRICAL, ENVIRONMENTAL INDEX **7**
2.1. ELECTRICAL INDEX 7
2.2. ENVIROMENTAL INDEX 7
2.3. INSTALLATION DIAGRAM 8
2.4. INSTALLATION 8
3. DRIVER INTERFACE AND WIRING **9**
3.1. INTERFACE DEFINITION 9
3.2. CONTROL SIGNAL WIRING 10
3.3. CAN COMMUNICATION PORT DESCRIPTION 12
3.4. STATUS INDICATOR LED 12
4. DIP SWITCH SETTING **13**
4.1. STEP RESOLUTION SETTING 13
4.2. MOTOR ROTATION DIRECTION SETTING 14
5. CANOPEN PROTOCOL **14**
5.1. COMMUNICATION SPECIFICATION FOLLOWED BY ZLIM42C 14
5.2. CANOPEN FUNCTION DESCRIPTION 14
5.3. DRIVER CONTROL PROTOCOL CiA402 18
5.4. OBJECT DICTIONARY 33

ZLTECH
ZLIM42C Integrated Open Loop Step Motor Manual Version 1.03

RELEASE NOTES:

Version	Update Time	Update Content	Updater
V1.00	2019-9-28	First Edition	LHY
V1.01	2019-12-19	1. Modify wiring note in PREFACE; 2. Modify input voltage range in Chapter 1.2, Chapter 2.1 and Chapter 3.1.1; 3. Add motor output holding torque; 4. Update Installation Diagram in Chapter 2.3; 5. Add command words in Chapter 5.2; 6. Modify function description in Example of 5.3.6; 7. Add 2009h content; modify 2048h to 2069h; add 2088h; modify 02-05 function in 2030h; 8. Update catalog page number.	LHY DHR
V1.02	2020-1-10	1. Revise the direction of the origin mode 17, 18, add 17, 18, 24, 29 limit is effective in Chapter 5.3.6; 2. Add 200Bh, 605Ah, 605Bh, 605Ch, 6085h to the object dictionary, modify 603Fh, 605Dh content in Chapter 5.4.	LHY DHR
V1.03	2020-08-31	1. Correct the number of CAN nodes in Chapter 1.2; 2. Revise the overvoltage protection threshold in Chapter 2.2; 3. Revise Status indication LED description in Chapter 3.4; 4. Update P/N from ZLIM42-C to ZLIM42C; 5. Revise bit5 description of 6040 in Chapter 5.3.4.	LHY

PREFACE

Thanks for choosing ZLIM47-C, the integrated open loop step motor.

This manual describes the installation, debugging, maintenance, operation and other aspects of the integrated open loop step motor ZLIM42C. Please read this manual in detail before use, and be familiar with the safety precautions.

This manual may be revised timely when product is improved, specification and version are changed or for some other reasons, which will not be notified particularly.

Any questions when using our products, please read the relevant manual or call our technical service department, we will meet your requirements in the shortest possible time.

Marks and warning signal:

Danger: Indicates that this operation error may endanger personal safety!

Attention: Indicates that this operation error may result in equipment damage!

SAFETY PRECAUTIONS

Open Box and Check

Do not install integrated step-servo motor which is damaged or with missing parts.

Installation

Installed on a non-flammable metal frame, prevent the intrusion of dust, corrosive gases, conductive objects, liquids and flammable materials, and maintain good heat dissipation conditions.

During installation, be sure to tighten the mounting screws of the integrated step-servo motor. It should be protected from vibration and shock.

Wiring

Please perform the wiring work by professional electrical engineer;

Before wiring, please confirm that the input power is off. Wiring and inspection must be performed after the power is turned off and the integrated step-servo motor indicator is off to prevent electric shock;

When plugging and unplugging the integrated step-servo motor terminals, make sure that its indicator is off before proceeding;

Please set the emergent stop circuit outside the controller;

Please tighten the output terminal with a suitable torque.

Electrify

Please confirm whether the main circuit input power is consistent with the rated working voltage of the integrated step-servo motor;

Do not test the integrated step-servo motor for high voltage and insulation resistance at will;

Do not connect the electromagnetic contactor or electromagnetic switch to the output circuit.

Operation

Do not directly touch the output terminals after the integrated step-servo motor is powered on;

When the system is running, the integrated step-servo motor may

have a high temperature rise, do not touch it;

Please confirm the input and output signals to ensure safe operation;

The alarm can be reset only after the operation signal is cut off. Alarm resetting in the running signal state will cause the integrated step-servo motor to restart suddenly;

Do not change the parameter settings of the integrated step-servo motor at will. The parameter modification needs to be performed under standby condition.

Maintenance and Inspection

Do not touch the integrated step-servo motor terminals directly, and some have high voltage, very dangerous;

Before powering up, be sure to install the cover; when removing the cover, be sure to cut off the power supply first;

Before wiring, please confirm whether the input power is off;

After cutting off the main circuit input power and confirming the integrated step-servo motor indicator light has completely extinguished, it can be inspected and maintained;

Do the inspection and maintenance by professional electrical engineer;

Do not do wiring, disassembling or other operation on the terminals during power on.

There is an integrated circuit on the main control board of the integrated step-servo motor. Please pay full attention when checking to avoid damage caused by static induction.

ZLTECH
ZLIM42C Integrated Open Loop Step Motor Manual Version 1.03

1. PRODUCT INTRODUCTION

1.1. Outline

ZLIM42C is a 2 phase hybrid open loop step motor with high-performance digital integrated driver. The system has a simple structure and high integration, and adds bus communication and single-axis controller functions. The bus communication adopts CAN bus interface, and supports CiA301 and CiA402 sub-protocols of the CANopen protocol.

1.2. Features

■ Full closed loop control, no step loss;

■ Adopt CAN bus communication, support CiA301 and CiA402 sub-protocol of CANopen protocol, can mount up to 127 devices;

■ CAN bus communication baud rate defaults to 500Kbps;

■ Support working modes such as position control, speed control and Home position return.

■ User can set parameters such as starting speed, acceleration time, deceleration time, maximum speed, and total pulse number through the bus to achieve S-shaped acceleration and deceleration function;

■ User can set the current, subdivision and locked current through the bus to control start and stop of the motor and query the real-time status of the motor;

■ Input voltage: 20-48VDC;

■ 4 Isolated signal input ports, programmable, implement the driver's functions such as enable, start stop, emergency stop and limit;

■ 2 isolated output ports, programmable, output driver‘s status and control signals;

■ 4 DIP switch selection, 16-segment step resolution;

■ With over-voltage, over-current, out of tolerance protect function etc.

1.3. Application

Suitable for all kinds of small automation equipment and instruments, such as: pneumatic marking machine, labeling machine, cutting machine, laser marking machine, plotter, small engraving machine, CNC machine tool, pick and place device. It is particularly effective in applications where users expect low noise, low vibration, high stationarity and high precision.

2. ELECTRICAL, ENVIRONMENTAL INDEX

2.1. Electrical Index

Driver Parameter		Min value	Typical value	Max value	Unit
Input voltage		20 VDC	24VDC	48VDC	V
Output current(peak)		0	1.5	2.2	A
Step signal frequency		0	-	200k	Hz
Control signal input current		7	10	16	mA
Over-voltage protection		-	55	-	VDC
Input signal voltage		-	5	-	VDC
Insulation resistance		100			MΩ
Holding torque	L=70mm		0.48		N.m
	L=82mm		0.72		

2.2. Environmental Index

Cooling Type		Natural cooling or forced cooling
Working environment	Application occasion	Avoid dust, oil mist and corrosive gases
	Working temperature	0~50℃
	Max. ambient humidity	90% RH(no condensation)
	Storage temperature	-10~70℃
	Vibration	10~55Hz/0.15mm

2.3. Installation Diagram

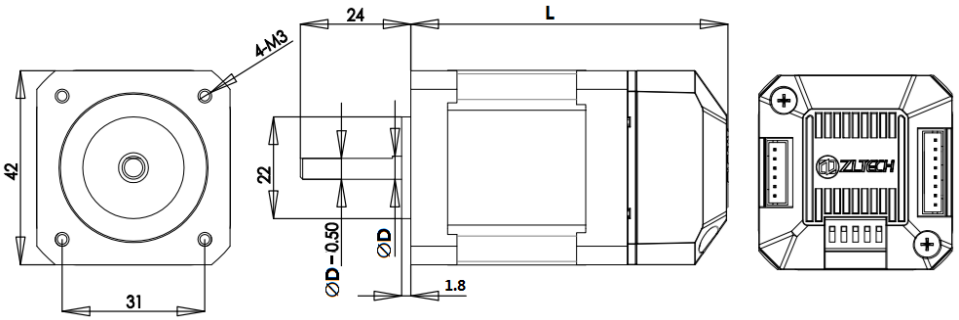

Fig.1 Installation dimension diagram (Unit: mm)

There are 2 options for L:70mm, 82mm. 2 options for ⌀D: 5mm, 8mm.

2.4. Installation

User could mount with the mounting holes on the front of the integrated step-servo motor. Use M3 screw to install through the holes in the four corners. The integrated step-servo motor will generate heat. If continuous operation is under high input voltage and high power conditions, the effective heat dissipation area or forced cooling should be expanded. Do not use in places where air is not circulating or where the ambient temperature exceeds 60℃; do not install it in a place that is wet or has metal shavings.

3. DRIVER INTERFACE AND WIRING

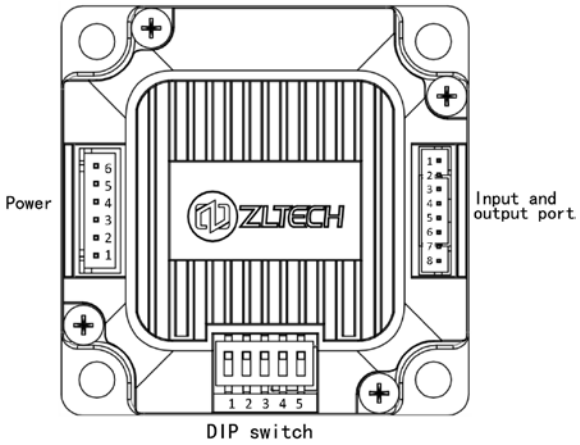

3.1. Interface Definition

3.1.1 Power input port

Port	Pin	Mark	Name	Function
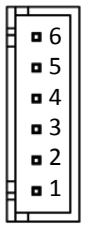	6	DC	Power interface	Power supply 20V-48V
	5	GND		
	4	CANH	Communication interface	CAN communication interface
	3	CANL		
	2	CANH		
	1	CANL		

3.1.2 DIP switch

Port	Pin	Mark	Name	Function
	1	SW1	DIP switch	CAN terminal resistance selection
	2	SW2		
	3	SW3		Driver address setting
	4	SW4		
	5	SW5		

3.1.3 Control signal port

Port	Pin	Mark	Name	Function
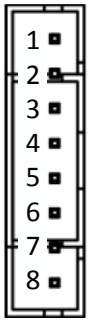	1	X0	Single-ended input	The default input voltage is 5V. **For other voltages, current limiting resistors must be added**, for example: 12V, external 1K 1 / 2W resistor; 24V, external 2K 1 / 2W resistor. **Supports both of NPN and PNP wiring modes, port functions can be modified by software.**
	2	X1		
	3	X2		
	4	X3		
	5	XCOM	Common input	
	6	Y0	Single-ended output	**Supports both of NPN and PNP wiring modes, port functions can be modified by software.**
	7	Y1		
	8	YCOM	Common output	

3.2 Control Signal Wiring

ZLIM42C series driver provides 4 optically isolated programmable input interfaces, which is compatible with NPN wiring and PNP wiring.

The 4(X0-X3) programmable input signals are isolated from the external control interface by an optocoupler, and the driver is compatible with common cathode and common anode connection methods, as shown in the figure below. In order to ensure the reliable conduction of the optocoupler inside the driver, the driving current provided by the controller is required to be at least 10mA.

The level pulse width of X0-X input needs to be greater than 10ms, otherwise the driver may not respond normally. X0-X3 timing diagram is shown in Figure 2.

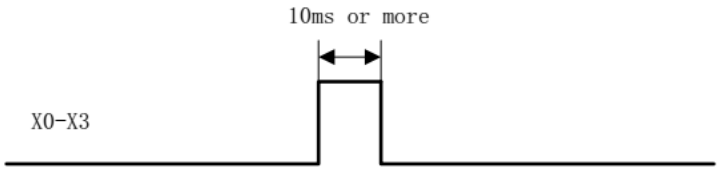

Fig.2 Control signal interface wiring diagram

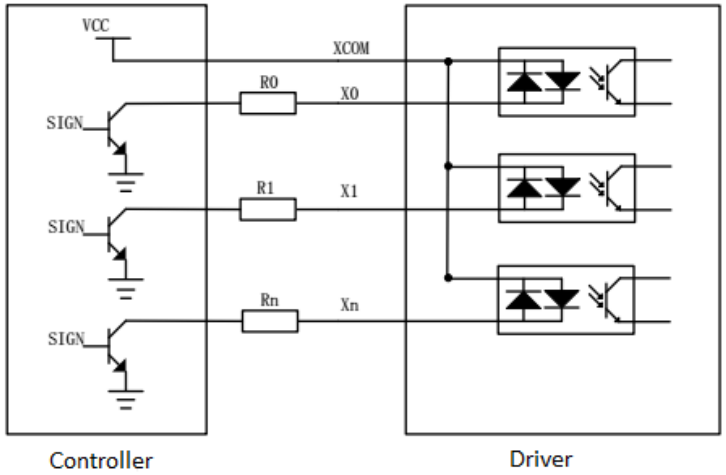

Fig.3 Input interface circuit

Note: The default input voltage of the control signal is 5V. For other voltages, current limiting resistors must be added, for example: 12V, external 1K 1 / 2W resistor; 24V, external 2K 1 / 2W resistor.

After the driver is powered on, X0-X3 defaults to the unspecified state. At this time, the input signal is invalid. Users can configure X0-X3 input functions through the bus.

ZLIM42C series driver provides 2 optocoupler isolated output terminals, supports both of NPN and PNP wiring modes, and can support high-level and low-level active controllers.

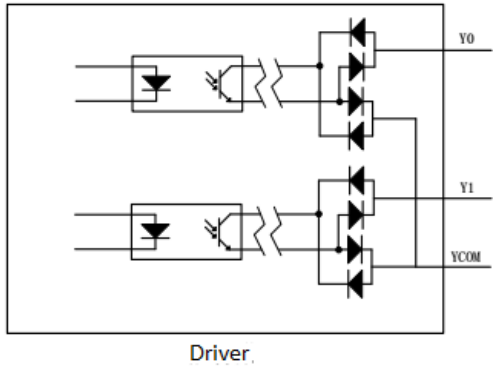

3.3. CAN communication port description

ZLIM42C series driver provides 4PIN communication port. For pin definition, please refer to 3.1.1 Power Port / Communication Port, which includes CANH, CANL, CANH and CANL. Note: Please use shielded twisted-pair cables for communication cables and ground them to ensure stable communication.

3.4. Status Indicator LED

The green LED is the power indicator, which is always on when the driver is powered up; it is off when the driver is powered off. The red LED is the fault indicator. When the driver fails, it will stop and prompt the corresponding fault code. The fault can be cleared when the user powers off and restarts the power. The status indicator LED represents different operation and fault information, as shown in the following table:

Status	Condition	Status indicator LED description	
over-voltage	Power supply voltage exceeds the maximum rated voltage	1 red	
over-current	The phase current through the motor exceeds the rated current, or inter phase short circuit.	2 red	
phase shortage	Poor contact between motor wire and driver board.	3 red	

internal voltage error	Driver internal fault	4 red	
EEPROM error	EEPROM parameter error	5 red	
Bus over-current	Power input current is too high	6 red	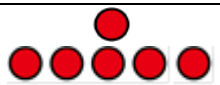

4. DIP SWITCH SETTING

ZLIM42C driver uses a five-digit DIP switch to set the terminal resistance and driver address. The details are as follows:

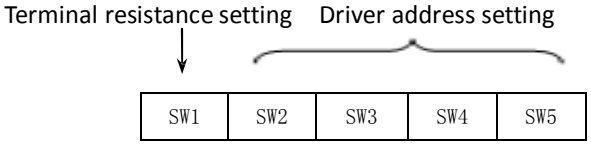

4.1. Step resolution Setting

SW2	SW3	SW4	SW5	Address
ON	ON	ON	ON	Customize
OFF	ON	ON	ON	1
ON	OFF	ON	ON	2
OFF	OFF	ON	ON	3
ON	ON	OFF	ON	4
OFF	ON	OFF	ON	5
ON	OFF	OFF	ON	6
OFF	OFF	OFF	ON	7
ON	ON	ON	OFF	8
OFF	ON	ON	OFF	9
ON	OFF	ON	OFF	10
OFF	OFF	ON	OFF	11
ON	ON	OFF	OFF	12
OFF	ON	OFF	OFF	13
ON	OFF	OFF	OFF	14

OFF	OFF	OFF	OFF	15

User can use CAN bus to control up to 127 ZLIM42C series drivers at the same time. The driver communication address is set with a 4-digit DIP switch. The address setting range is 0-15, where address 0 is reserved by the system. When the driver address is set greater than 15, user needs to use the upper-level debugging software to set and save it. And SW2-SW5 switches must be all set to ON.

4.2. Terminal resistance setting

User can select whether to incorporate a 120-terminal resistor through this bit. According to the application, it is generally determined that only the master terminal and the last slave need to connect a 120-ohm terminal resistor.

SW1 = OFF, invalid;

SW1 = ON, effective.

5. CANOPEN PROTOCOL

This chapter only gives a brief introduction to the related concepts and precautions that are most commonly used during the use of ZLIM42C, so that user can understand the general usage of ZLIM42C series product in the shortest time.

5.1. Communication specifications followed by ZLIM42C

- Compliant with standards of CAN 2.0A
- Compliant with CANopen standard protocol DS 301 V4.02
- Compliant with CANopen standard protocol DSP 402 V2.01

5.2. CANopen functional description

Object Dictionary

Object Dictionary (OD for short) is the core concept of CANopen. Every CANopen device in the network has an object dictionary. Object dictionary is a set of ordered data objects. These objects describe all the communication and device parameters of the device, and determine its location in the object dictionary through a 16-bit index and an 8-bit subindex.

Message format

As the application layer protocol of CAN bus, CANopen protocol mainly defines the arbitration field (11 bits) and data field (maximum 8 bytes) in CAN message.

601	40	60	61	00	00	00	00	00
COB-ID	Byte 0	Byte 1	Byte 2	Byte 3	Byte 0	Byte 1	Byte 2	Byte 3

In CANopen protocol, it is stipulated that 11 arbitration bits are divided into the upper 4 bits of the function code (Function Code) and the lower 7 bits of the node address (Node-ID), which is called COB-ID (Communication Object Identifier). The structure of CANopen identifier is as follows:

※CANopen identifier format

CANopen predefined master / slave connection set										
10	9	8	7	6	5	4	3	2	1	0
Function Code				Node-ID						

The value of the Node-ID node address ranges from 1 to 127.

The ZLIM42C series driver supports the following types of CANopen messages:

☐ PDO (Process Data Object) message
☐ SDO (Service Data Object) message
☐ NMT (Network Management Object) message
☐ SYNC (Synchronisation Object) message
☐ EMCY (Emergency Object) message

Command Word

Command	Function	Type	Data length
2F	Set	M->S Request	1 byte
2B	Set	M->S Request	2 byte
27	Set	M->S Request	3 byte
23	Set	M->S Request	4 byte
60	Setting feedback	S->M Confirm	
40	Read	M->S Request	0 byte
4F	Read feedback	S->M Answer	1 byte
4B	Read feedback	S->M Answer	2 byte
47	Read feedback	S->M Answer	3 byte
43	Read feedback	S->M Answer	4 byte
80	Error	S->M Answer	4 byte

ZLTECH
ZLIM42C Integrated Open Loop Step Motor Manual Version 1.03

The following table is the function codes of various messages predefined in the communication sub-protocol CiA301 and the corresponding COB-ID.

※Function code and COB-ID of communication objects

Broadcast object for CANopen predefined master / slave connection set

Object	Function Code	Node Address	COB-ID	Object Dictionary Index
NMT(Network Management)	0000	0	0x000	-
Synchronization Object	0001	0	0x080	1005h,1006h,1007h

Peer object of CANopen master / slave connection set

Object	Function Code	Node Address	COB-ID	Object Dictionary Index
Emergency	0001	1-127	0x081-0x0FF	1024h,1015h
PDO1(TX)	0011	1-127	0x181h-0x1FFh	1800h
PDO1(RX)	0100	1-127	0x201h-0x27Fh	1400h
PDO2(TX)	0101	1-127	0x281h-0x2FFh	1801h
PDO2(RX)	0110	1-127	0x301h-0x37Fh	1401h
PDO3(TX)	0111	1-127	0x381h-0x3FFh	1802h
PDO3(RX)	1000	1-127	0x401h-0x47Fh	1402h
PDO4(TX)	1001	1-127	0x481h-0x4FFh	1803h
PDO4(RX)	1010	1-127	0x501h-0x57Fh	1403h
SDO(TX)	1011	1-127	0x581h-0x5FFh	1200h
SDO(RX)	1100	1-127	0x601h-0x67Fh	1200h
Heart Beat	1110	1-127	0x701h-0x77Fh	1016h-1017h

Process Data Object (PDO)

SDO protocol is used to operate on the object dictionary and process data with low real-time performance. Data with high real-time performance requirements is usually transmitted through PDO.

PDO communication method is based on a Producer / Consumer model. Data is sent from one device (producer) to another device (consumer) or many other devices (broadcast), and it is a transmission without acknowledgement, data transfer is limited to 1 to 8 bytes. CANopen devices receive or send by describing 2 parameters of PDO: Communication Parameter and Mapping Parameter.

ZLIM42C series driver supports 4 RPDO and 4 TPDO, and describes the communication parameters and mapping parameters of each PDO communication port according to the CiA301 subprotocol.

Service Data Object (SDO)

SDO message is mainly used to access the device's object dictionary to configure devices in a CANopen network. SDO communication method is based on the Client/Server model, that is, the message sent must be confirmed by the receiver. The visitor is called Client, and the device where the object dictionary is accessed and responds to read and write requests is called Server. The protocol stipulates that the value of the read object dictionary 4ed is called Upload, and the value of the modified parameter is called Download.

ZLIM42C series driver supports both of fast SDO protocol and ordinary SDO protocol transmission modes as described in CiA301.

Network Management Object (NMT)

NMT(Network Management) is based on Master / Slaver structure. The master station can control the state machine of the slave stations through NMT message. After the CANopen device is powered on or reset, the device will first enter Initialization state. After the program is initialized, the device will automatically send a Boot-Up message, and then automatically enter the Pre-Operational state. After that, the slave device switches between different states according to the NMT message sent by the master.

Synchronization Object (SYNC)

SYNC(Synchronization object) provides a reference clock for the network to synchronize devices in the network. SYNC belongs to the producer/consumer communication relationship. SYNC object is sent by a SYNC producer, and all other devices in the

network can receive SYNC. Assuming that all devices in the network support the synchronous PDO function, user can use SYNC to achieve simultaneous actions of multiple devices. The COB-ID of SYNC message is 0x80, which has a high priority and guarantees the normal transmission of SYNC. In addition, the SYNC message can contain no data to reduce the data amount of SYNC message.

Emergency Object (EMCY)

The device can report its internal fault to CANopen network through the emergency object EMCY. EMCY belongs to the producer/consumer communication model, and all devices in the network can consume the message. EMCY message occupies all 8 bytes of data. Among them, byte 0 and byte 1 are error codes, and the error codes correspond to various types of errors that occur on the device. Byte 2 is the error register, whose value is stored in the object dictionary 1001h, and corresponds to various types of faults that occur in the device. The content of byte 3 to byte 7 is the error domain defined by the manufacturer, which can be the specific fault type. Through EMCY object, the master station can easily grasp the specific failure situation of the slave station.

5.3. Driver control protocol CiA402

5.3.1 CiA402 state machine

CiA402 protocol defines a standard state machine for motion control devices. It also defines various operating modes and their definitions in the object dictionary. Standard state machine describes the state of the device and the possible control sequences of the driver. Each step state represents a specific internal or external behavior, and the state of the device determines which commands can be received.

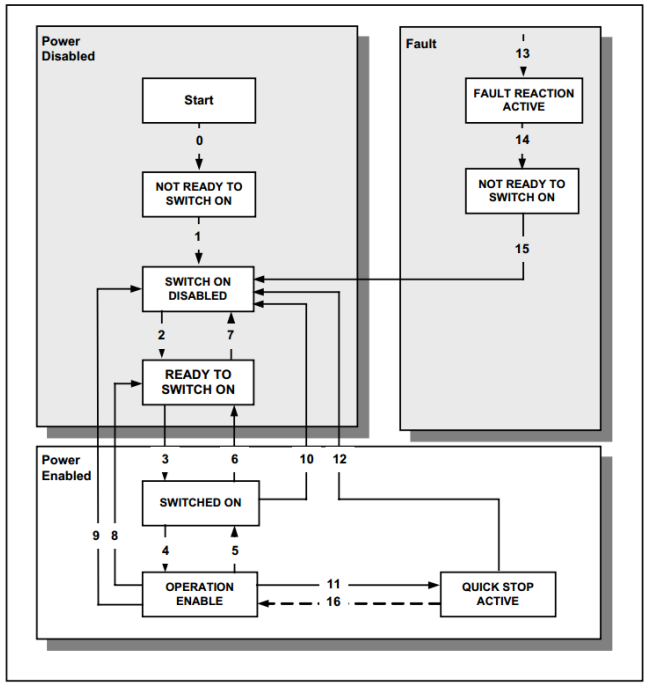

Driver state machine

※The corresponding description of each state of the state machine is as follows:

State Name	Description
NOT READY TO SWITCH ON	Low level power has been applied to the drive. The drive is being initialized or is running self test. A brake, if present, has to be applied in this state. The drive function is disabled.
SWITCH ON DISABLED	Drive initialization is complete. The drive parameters have been set up. Drive parameters may be changed. High voltage may not be applied to the drive. The drive function is disabled.
READY TO SWITCH ON	High voltage may be applied to the drive. The drive parameters may be changed. The drive function is disabled.
SWITCH ON	High voltage has been applied to the drive. The power amplifier is ready. The drive parameters may be changed. The drive function is disabled.
OPERATION ENABLE	No faults have been detected. The drive function is enabled and power is applied to the motor. The drive parameters may be changed.(This corresponds to normal operation of the drive.)
QUICK STOP ACTIVE	The drive parameters may be changed. The quick stop function is being executed. The drive function is enabled and power is applied to the motor.
FAULT REACTION ACTIVE	The drive parameters may be changed. A non-fatal fault has occurred in the drive. The quick stop function is being executed. The drive function is enabled and power is applied to the motor.

ZLTECH
ZLIM42C Integrated Open Loop Step Motor Manual Version 1.03

The driver state machine is controlled by bit0 ~ bit3, bit7 of the control word (object 6040h), as described in the following table:

※**Control word switching status**

Command	Control Word					State Switch
	Bit7	Bit3	Bit2	Bit1	Bit0	
Shutdown	0	X	1	1	0	2,6,8
Switchon	0	0	1	1	1	3
Switchon +Enable operation	0	1	1	1	1	3+4
Disable voltage	0	X	X	0	X	7,9,10,12
Quick stop	0	X	0	1	X	7,10,11
Disable Operation	0	0	1	1	1	5
Enable Operation	0	1	1	1	1	4,16
Fault reset	↑	X	X	X	X	15
Bits marked as X are invalid						

Each state in the state machine can be displayed by bit0 ~ bit3, bit5, bit6 of the status word (object 6041h), as described in the following table:

※**Status word switching state**

State	Status word					
	Bit6	Bit5	Bit3	Bit2	Bit1	Bit0
Not ready to switch on	0	X	0	0	0	0
Switch on disabled	1	X	0	0	0	0
Ready to switch on	0	1	0	0	0	1
Switched on	0	1	0	0	1	1
Operation enabled	0	1	0	1	1	1
Quick stop active	0	0	0	1	1	1
Fault reaction active	0	X	1	1	1	1
Fault	0	X	1	0	0	0
Bits marked as X are invalid						

5.3.2 Control word and status word

The start and stop control instruction and status description of the driver are mainly implemented through the control word 6040h and status word 6041h. Therefore, the skilled use of the control word and status word is very necessary. The following table briefly describes the definition of each bit of control word and status word.

Control word	Common Command	Function Description
6040h	00	Initialization step 0: the state of the lower 4 bits of 6041 is 0000, the motor is released;
	06	Initialization step 1: the state of the lower 4 bits of 6041 is 0001, the motor is released;
	07	Initialization step 2: the state of the lower 4 bits of 6041 is 0011, the motor is enabled;
	0F	Initialization step 3: the state of the lower 4 bits of 6041 is 0111, the motor is enabled;
	0F	In speed mode (6061 = 3), start command;
	0F->1F	In homing mode (6061 = 6), start command; In absolute motion of position mode (6061 = 1), start command;
	4F->5F	In relative motion of position mode (6061 = 1), start command.

ZLTECH
ZLIM42C Integrated Open Loop Step Motor Manual Version 1.03

Status word	Bit definition	Function Description
6041h	Bit0~Bit3	6040=0: xxxx xxxx xxxx 0000 6040=6: xxxx xxxx xxxx 0001 6040=7: xxxx xxxx xxxx 0011 6040=F: xxxx xxxx xxxx 0111
	Bit7	0: The driver is normal; 1: Driver alarm;
	Bit8	0: Homing is not completed; 1: Homing has been completed;
	Bit11	0: Bit4 state of 6040h is 0; 1: Bit4 state of 6040h is 1;
	Bit13	0: Motor release; 1: Motor is enabled;
	Bit14	0: The motor is stopped; 1: The motor is running;
	Bit15	0: Motion is not in place in position mode; 1: Motion is in place in position mode.

Eg: initialize the driver after power-on, and enter the normal working state after initialization. This operation is generally performed after power-on.

Master Station	Slave Station	Slave Station Status Word
00: 01 00	NMT Initialize	NMT Initialize
601:2B 40 60 00 00 00 00 00	581:60 40 60 00 00 00 00 00	6041: xxxx xxxx xxxx 0000
601:2B 40 60 00 06 00 00 00	581:60 40 60 00 00 00 00 00	6041: xxxx xxxx xxxx 0001
601:2B 40 60 00 07 00 00 00	581:60 40 60 00 00 00 00 00	6041: xxxx xxxx xxxx 0011
601:2B 40 60 00 0F 00 00 00	581:60 40 60 00 00 00 00 00	6041: xxxx xxxx xxxx 0111

5.3.3 Working Mode

CANopen sets the driver working mode through the object 6060h (Modes_of_operation), and reflects the current working mode status of the driver

through the object 6061h (Modes_of_operation_display). ZLIM42C series driver currently supports 3 working modes: Profile Position Mode, Profile Velocity Mode, Homing Mode.

※ **Driver working mode**

Index	Sub-Index	Name	Type	Attribute	PDO Mapping	Parameter Range	Default
6060h	00	Modes_of_operation	I8	RW	NO	0: Undefined 1: Profile Position Mode 2: Profile Velocity Mode 6: Homing Mode	0

5.3.4 Position Mode

Work process description

The position mode is realized by S-shaped acceleration and deceleration curve. User can set the initial speed (address 200E0010h), maximum speed (address 60810020h), acceleration time (address 60830020h), deceleration time (address 60840020h), and total pulse number (address 607A0020h) to achieve precise position control via the bus. The S-shaped acceleration / deceleration curve is shown in the figure below.

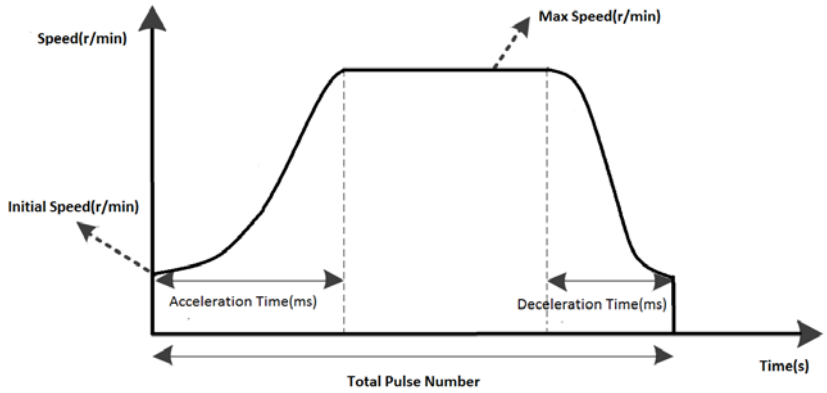

Position mode acceleration/deceleration curve

When the total pulse number set by user is small, the motor may need to decelerate before it accelerates to the maximum speed (that is, the motor does not accelerate to the maximum speed set by the user during actual operation). The speed curve is shown in the figure below. The solid line in the figure shows the actual running curve of the motor, and the dotted line is the curve that motor needs to run, to accelerate to the set maximum speed. The theoretical total pulse number is the minimum total pulse number calculated according to the user-set parameters (initial speed, maximum speed, acceleration time, deceleration time). When the total pulse number set by the user is less than the theoretical total pulse number, the motor will run as shown by the solid line in the figure.

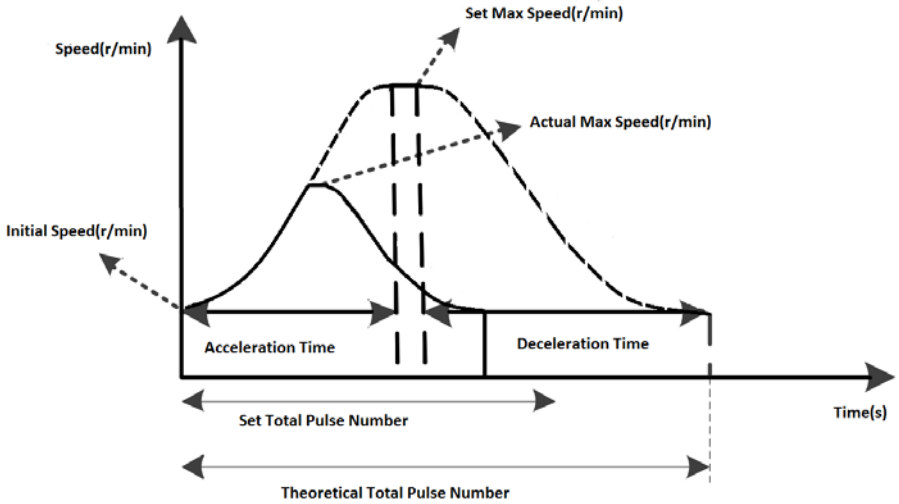

Position mode acceleration/deceleration curve (not accelerated to the set maximum speed)

※**Related Object Dictionary Content**

Index	Sub-Index	Name	Type	Attribute	Parameter Range	Set
6060h	00	Modes_of_Operation	I8	RW	0,1,3,6	1
607Ah	00	Target_position	I32	RW	-1000000~1000000	3200
200Eh	00	Initial Speed	U32	RW	2-300 r/min	5 r/min
6081h	00	Profile_velocity	U32	RW	5-3000 r/min	120

						r/min
6083h	00	Profile_acceleration	U32	RW	0-2000ms	100ms
6084h	00	Profile_deceleration	U32	RW	0-2000ms	100ms

Control word and status word

The control word in position mode is controlled by bit4 ~ bit6, bit8:

Byte	Name	Function Description
Bit4	New set-point	0: No assumed target position; 1: Assumed target position;
Bit5	Change set immediately	0: Complete the current position and then start the next position; 1: Interrupt the current position and start the next position (Not support temporarily);
Bit6	ABS/REL	0: The target position is an absolute value 1: The target position is a relative value
Bit8	Halt	0: Terminate current position 1: Set deceleration to stop
Note: According to the above table , the control word of absolute position motion command is 0x0F-> 0x1F, and the control word of relative position motion command is 0x4F-> 0x5F.		

※Bit10, Bit12, Bit15 of status word show the driver status

Byte	Name	Function Description
Bit10	Target reached	0: Halt = 0 target position has not been reached; Halt = 1 motor is decelerating; 1: Halt = 0 reach the target position; Halt = 1 motor speed is 0;
Bit12	Set-point acknowledge	0: The target position is pending; 1: The target position has taken effect;
Bit15	Pend	0: Not in place; 1: In place.

Example

Make the motor run relatively based on the parameters (acceleration time 100ms, deceleration time 100ms, maximum speed 60r / min, total pulse number 3200).

※Assume that the slave station number of the driver is 1. CANopen instruction control is described in the following table:

Master Station	Slave Station	Function Description
00：01 00	(According to PDO mapping situation)	NMT Initialize
601:2B 40 60 00 00 00 00 00	581:60 40 60 00 00 00 00 00	Initialize the driver state machine
601:23 83 60 00 64 00 00 00	581:60 83 60 00 00 00 00 00	Set acceleration time to 100ms
601:23 84 60 00 64 00 00 00	581:60 84 60 00 00 00 00 00	Set deceleration time to 100ms
601:23 81 60 00 3C 00 00 00	581:60 81 60 00 00 00 00 00	Set maximum speed 60r / min
601:23 7A 60 00 80 0C 00 00	581:60 7A 60 00 00 00 00 00	Set the total pulse number 3200
601:2F 60 60 00 01 00 00 00	581:60 60 60 00 00 00 00 00	Switch work mode 01 Position mode
601:2B 40 60 00 06 00 00 00	581:60 40 60 00 00 00 00 00	Switch the driver state machine (Refer to 402 protocol)
601:2B 40 60 00 07 00 00 00	581:60 40 60 00 00 00 00 00	
601:2B 40 60 00 0F 00 00 00	581:60 40 60 00 00 00 00 00	
601:2B 40 60 00 4F 00 00 00	581:60 40 60 00 00 00 00 00	Send relative motion command 1
601:2B 40 60 00 5F 00 00 00	581:60 40 60 00 00 00 00 00	Send relative motion command 2

5.3.5 Speed Mode

Working Process Description

The acceleration curve under speed mode is shown in the figure below. Differ from position mode, speed mode only needs to set 3 parameters: initial speed (address 200E00h), target speed (address 608100h), acceleration time (address 608300h). After the motor accelerates to the maximum speed according to set 3 parameters , it will run uniformly at the maximum speed.

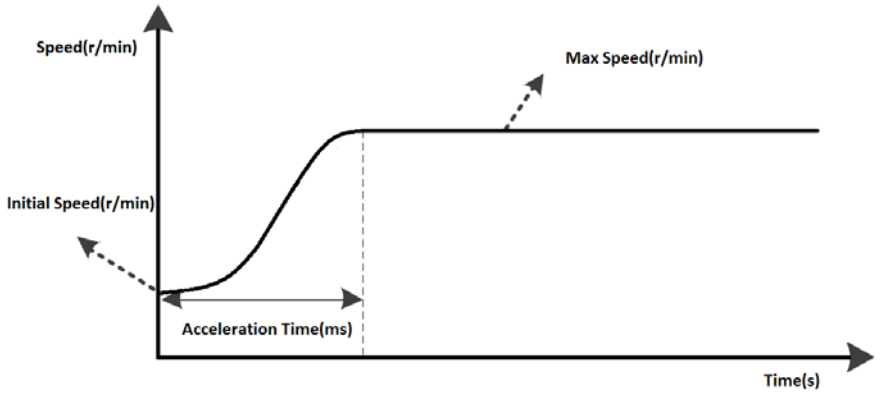

Speed mode acceleration curve

※Related Object Dictionary Content

Index	Sub-Index	Name	Type	Attribute	Parameter Range	Set
6060h	00	Modes_of_Operation	I8	RW	0,1,3,6	3
200Eh	00	Initial Speed	U16	RW	2-300 r/min	5 r/min
60FFh	00	Target_velocity	I32	RW	-3000 r/min ~3000 r/min	120 r/min
6083h	00	Profile_acceleration	U32	RW	0-2000ms	100ms
6084h	00	Profile_deceleration	U32	RW	0-2000ms	100ms

Control word and status word

※Control word in speed mode is controlled by bit8

Byte	Name	Function Description
Bit8	Halt	0: Implement motion; 1: Stop motion.

ZLTECH
ZLIM42C Integrated Open Loop Step Motor Manual Version 1.03

※Bit10 and Bit12 of status word show driver status

Byte	Name	Function Description
Bit10	Target reached	0: Halt = 0 target speed has not been reached; Halt = 1 motor is decelerating; 1: Halt = 0 reach target speed; Halt = 1 motor speed is 0;
Bit12	Speed	0: Speed is not 0; 1: Speed is 0.

Example

Make the motor run based on the parameters (acceleration time 100ms, deceleration time 100ms, maximum speed 60r / min).

※Assume that the slave station number of the driver is 1. CANopen instruction control is described in the following table:

Master Station	Slave Station	Function Description
00：01 00	(According to PDO mapping situation)	NMT Initialize
601:2B 40 60 00 00 00 00 00	581:60 40 60 00 00 00 00 00	Initialize the driver state machine
601:23 83 60 00 64 00 00 00	581:60 83 60 00 00 00 00 00	Set acceleration time to 100ms
601:23 84 60 00 64 00 00 00	581:60 84 60 00 00 00 00 00	Set deceleration time to 100ms
601:23 FF 60 00 3C 00 00 00	581:60 81 60 00 00 00 00 00	Set target speed 60rpm
601:2F 60 60 00 03 00 00 00	581:60 60 60 00 00 00 00 00	Switch work mode 03 Speed mode
601:2B 40 60 00 06 00 00 00	581:60 40 60 00 00 00 00 00	Switch the driver state machine (Refer to 402 protocol)
601:2B 40 60 00 07 00 00 00	581:60 40 60 00 00 00 00 00	
601:2B 40 60 00 0F 00 00 00	581:60 40 60 00 00 00 00 00	

5.3.6 Homing Mode

Working Process Description

In homing mode, the origin signal needs to be connected to the input terminal of driver, and the search and position fix of the mechanical home position is completed inside the driver.

At the same time, the value of the working mode object 6060h needs to be set to 6. When the register of the working mode status object 6061h is read as 6, the related operation of the HM working mode can be performed. The objects involved in this mode are as follows:

※**Related Object Dictionary Content**

Index	Sub-Index	Name	Type	Attribute	Parameter Range	Set
6060h	00	Modes_of_Operation	I8	RW	0,1,3,6	6
6098h	00	Homing_method	U8	RW	17: Negative limit mode; 18: Positive limit mode; 24: Forward origin mode; 29: Reverse origin mode;	0
6099h	01	Homing_speeds_Speed_during_search_for_switch	U32	RW	0-3000 r/min	120 r/min
6099h	02	Homing_speeds_Speed_during_search_for_zero	U32	RW	0-3000 r/min	60 r/min
609Ah	00	Homing_acceleration	U32	RW	0-2000ms	100ms
607Ch	00	Home_offset	I32	RW	-0x7FFFFFFF ～0x7FFFFFFF	0

Currently the driver supports 4 homing modes:

1)6098h = 17: Look for positive limit signal in the positive direction. After encountering the positive limit signal, decelerate to stop and retreat for a certain distance, then search for the positive limit signal in the reverse direction at a slow speed. Stop after finding it and the homing operation is completed. If the motor runs in the reverse direction, the negative limit is valid, the machine stops immediately, and the homing fails.

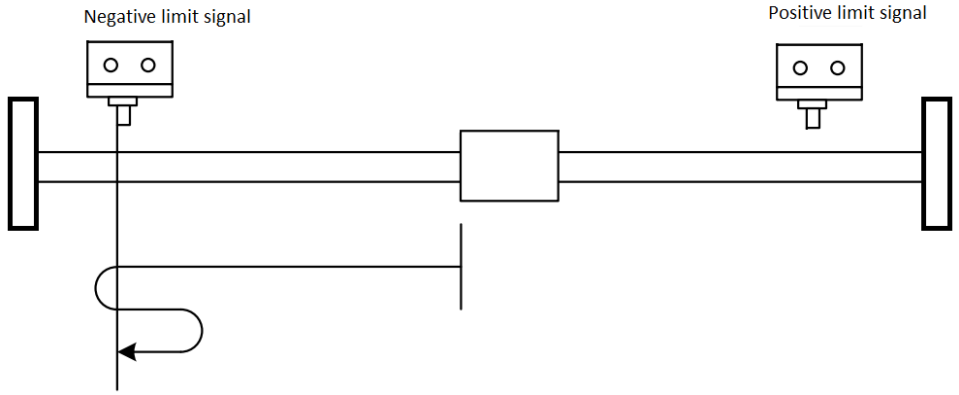

2) 6098h = 18: Look for the negative limit signal in the reverse direction. After encountering the negative limit signal, decelerate to stop and retreat for a certain distance, and then search for the negative limit signal in the reverse direction at a slow speed. Stop after finding it and the homing operation is completed. If the motor runs in the forward direction and the positive limit is valid, it will immediately stop and fail to return to the origin.

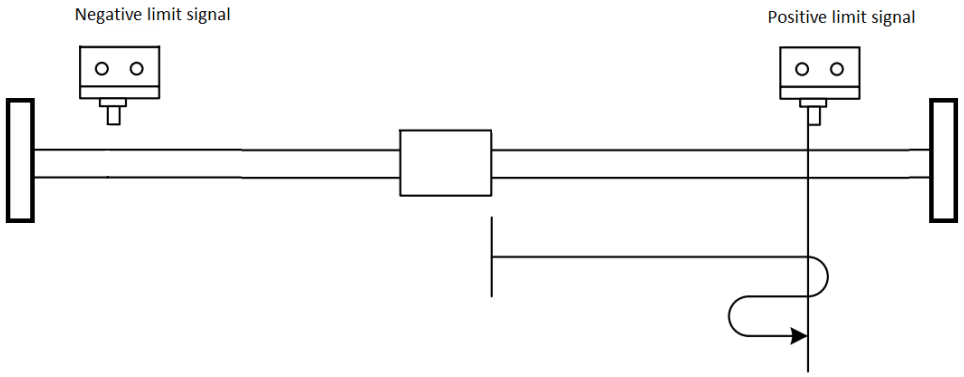

3)6098h = 24: Find the origin in the opposite direction. When the origin is encountered, it will decelerate to stop and go back a distance. Then it will find the origin in the reverse direction at a slow speed. When an inverse limit is encountered during homing, the reverse movement continues to search for the origin. If the motor runs in the forward direction and the positive limit is valid, it will immediately stop and fail to return to the origin.

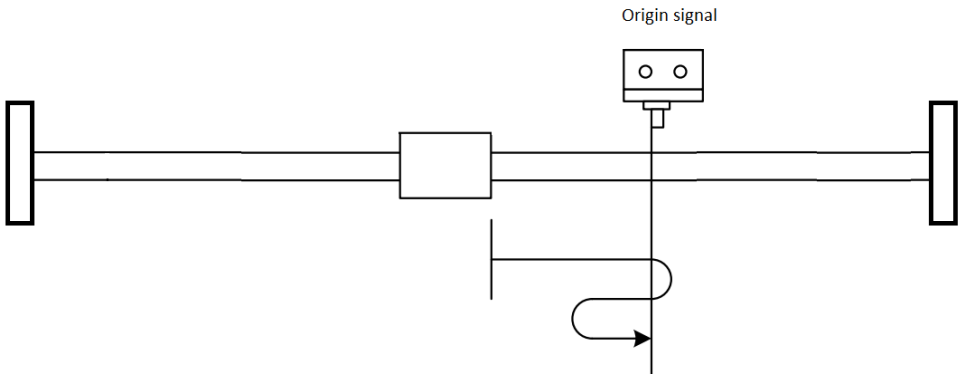

4) 6098h = 29: Find the origin in the positive direction. After encountering the origin, decelerate and stop, and then find the origin in a slow forward direction. Stop after finding it and the homing operation is completed. When the positive limit is encountered during homing, the reverse movement continues to search for the origin. If the motor runs in the reverse direction, the negative limit is valid, the machine stops immediately, and the homing fails.

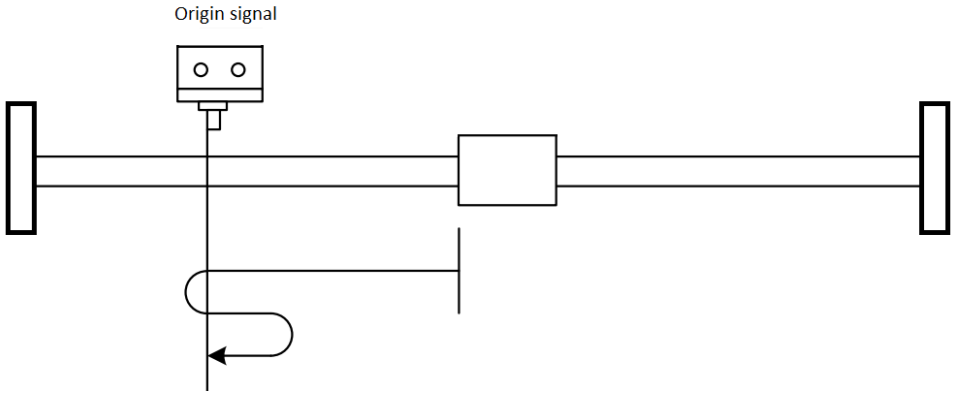

The 609901h object is the origin search speed, and the 609902h object is the origin search speed. The lower the value of 6009902h, the higher the search accuracy. In addition, if you need to set the origin position to a position away from the mechanical origin, you can set the origin offset by 607Ch carry out.

☐ Control word and status word

※The control word in homing mode is controlled by bit4, bit8

Byte	Name	Function Description
Bit4	Homing operation start	0: Zero return mode is not active 0↑ 1: Start zero return mode 1: Home mode is activated 1↓ 0: Interrupt return to zero mode
Bit8	Halt	0: Perform Bit4 exercise 1: Stop motion with zero return acceleration
Note: According to the table above, the control word is sent as 0x0F-> 0x1F.		

※Bit8 and Bit10 of status word show the driver status:

Byte	Name	Function Description
Bit8	Homing attained	0: Zero return mode is not completed 1: Zero return mode is complete
Bit10	Target reached	0: Halt = 0 The home position is not reached; Halt = 1 motor deceleration; 1: Halt = 0 reached zero position;

		Halt = 1 motor speed is 0;

Eg:

Finish the work of returning to the origin. Select the forward limit + origin mode to return to the origin. The return speed is 120r / min. The return speed is 60r / min. The acceleration / deceleration time is 100ms. The origin is not compensated.

※ Assuming the slave station number of the drive is 1, the CANopen command control is described in the following table:

Master Station	Slave Station	Function Description
00：01 00	(Depending on PDO mapping conditions)	NMT Initialization
601:2B 40 60 00 00 00 00 00	581:60 40 60 00 00 00 00 00	Initialize the driver state machine
601:2F 98 60 00 12 00 00 00	581:60 98 60 00 00 00 00 00	Positive limit mode
601:23 99 60 01 78 00 00 00	581:60 99 60 01 00 00 00 00	Home speed 120r/min
601:23 99 60 02 3C 00 00 00	581:60 99 60 02 00 00 00 00	Return to origin query speed 60r/min
601:23 9A 60 00 64 00 00 00	581:60 9A 60 00 00 00 00 00	Set the deceleration time to 100ms
601:2F 60 60 00 06 00 00 00	581:60 60 60 00 00 00 00 00	Switch work mode 06 Return to origin mode
601:2B 40 60 00 06 00 00 00	581:60 40 60 00 00 00 00 00	Switching the drive state machine (Refer to 402 protocol)
601:2B 40 60 00 07 00 00 00	581:60 40 60 00 00 00 00 00	
601:2B 40 60 00 0F 00 00 00	581:60 40 60 00 00 00 00 00	
601:2B 40 60 00 1F 00 00 00	581:60 40 60 00 00 00 00 00	Send back to origin motion instruction

5.4 Object dictionary

The ZLIM42C series bus type stepper motor driver parameter register includes three parts, namely 1000h ~ 1FFFh register defined by CIA301, 2000h ~ 2FFFh register defined by the manufacturer and 6000h ~ 6FFFh register defined by CIA402.

1000h ~ 1FFFh registers are basic parameters of CANopen related parameters defined

by CIA301, including SDO, PDO, and mapping registers;

The 2000h ~ 2FFFh register is a manufacturer-defined register content, including subdivision and current modification can be implemented within this group of parameters;

6000h ~ 6FFFh registers are motion parameters related to motion control defined by CIA402, including position mode, speed mode, return-to-origin mode and other working mode registers and related motion parameter registers.

Index	Sub-index	Name	Description	Type	Attributes	PDO mapping	Defaults
CiA301 Basic Communication Parameter Group							
1000h	00	Device Type	This device supports CiA301, CiA402 protocol	U32	RO	NO	0X00040192
1001h	00	Error Register	Driver current error status	U8	RO	NO	0
1005h	00	COB ID SYNC	COB identifier of synchronization message	U32	RW	NO	0x80
1009h	00	Manufacturer Hardware Version	Hardware version	U16	RO	NO	-
100Ah	00	Manufacturer Software Version	Software version	U16	RO	NO	-
1014h	00	COB ID EMCY	EMNC Emergency Message COB	U32	RW	NO	0x80
1017h	00	Producer Heartbeat Time	Producer heartbeat interval, unit: ms	U16	RW/S	NO	0
1018h	00	Number of entries	Sub-index	U8	RO	NO	5
	01	Vendor Id	Vendor ID	U32	RO	NO	0x0100
	02	Product Code	Supplier Product Number	U32	RO	NO	0x0001

1200h	00	Number of entries	Number of entries	U8	RO	NO	2
	01	COB-ID Client to Server	COB-ID Client to Server	U32	RO	NO	600h+Node-ID
	02	COB-ID Server to Client	COB-ID Server to Client	U32	RO	NO	580h+Node-ID
1400h	00	Number of entries	Number of entries	U8	RO	NO	5
	01	COB ID	RPDO0 COB ID	U32	RO	NO	200+Node-ID
	02	Transmission Type	Transmission Type	U8	RW/S	NO	FFh
	03	Inhibit Time	Inhibit Time	U16	RW/S	NO	0
	04	Compatibility Entry	Compatibility Entry	U8	RW	NO	0
	05	Event Timer	Event Timer	U16	RW/S	NO	0
1401h	00	Number of entries	Number of entries	U8	RO	NO	5
	01	COB ID	RPDO1 COB ID	U32	RO	NO	300+Node-ID
	02	Transmission Type	Transmission Type	U8	RW/S	NO	FFh
	03	Inhibit Time	Inhibit Time	U16	RW/S	NO	0
	04	Compatibility Entry	Compatibility Entry	U8	RW	NO	0
	05	Event Timer	Event Timer	U16	RW/S	NO	0
1402h	00	Number of entries	Number of entries	U8	RO	NO	5
	01	COB ID	RPDO2 COB ID	U32	RO	NO	400+Node-ID
	02	Transmission Type	Transmission Type	U8	RW/S	NO	FFh
	03	Inhibit Time	Inhibit Time	U16	RW/S	NO	0
	04	Compatibility Entry	Compatibility Entry	U8	RW	NO	0
	05	Event Timer	Event Timer	U16	RW/S	NO	0
1403h	00	Number of entries	Number of entries	U8	RO	NO	5
	01	COB ID	RPDO3 COB ID	U32	RO	NO	500+Node-ID

	02	Transmission Type	Transmission Type	U8	RW/S	NO	FFh
	03	Inhibit Time	Inhibit Time	U16	RW/S	NO	0
	04	Compatibility Entry	Compatibility Entry	U8	RW	NO	0
	05	Event Timer	Event Timer	U16	RW/S	NO	0
1600h	00	Number of entries	Number of entries	U8	RO	NO	1
	01	PDO Mapping Entry	Map to 6040h register	U32	RW/S	NO	60400010h
	02	PDO Mapping Entry_2	Unmapped	U32	RW/S	NO	-
	03	PDO Mapping Entry_3	Unmapped	U32	RW/S	NO	-
	04	PDO Mapping Entry_4	Unmapped	U32	RW/S	NO	-
1601h	00	Number of entries	Number of entries	U8	RO	NO	0
	01	PDO Mapping Entry	Unmapped	U32	RW/S	NO	-
	02	PDO Mapping Entry_2	Unmapped	U32	RW/S	NO	-
	03	PDO Mapping Entry_3	Unmapped	U32	RW/S	NO	-
	04	PDO Mapping Entry_4	Unmapped	U32	RW/S	NO	-
1602h	00	Number of entries	Number of entries	U8	RO	NO	0
	01	PDO Mapping Entry	Unmapped	U32	RW/S	NO	-
	02	PDO Mapping Entry_2	Unmapped	U32	RW/S	NO	-
	03	PDO Mapping Entry_3	Unmapped	U32	RW/S	NO	-
	04	PDO Mapping Entry_4	Unmapped	U32	RW/S	NO	-

1603h	00	Number of entries	Number of entries	U8	RO	NO	0
	01	PDO Mapping Entry	Unmapped	U32	RW/S	NO	-
	02	PDO Mapping Entry_2	Unmapped	U32	RW/S	NO	-
	03	PDO Mapping Entry_3	Unmapped	U32	RW/S	NO	-
	04	PDO Mapping Entry_4	Unmapped	U32	RW/S	NO	-
1800h	00	Number of entries	Number of entries	U8	RO	NO	5
	01	COB ID	TPDO0 COB ID	U32	RO	NO	180+Node-ID
	02	Transmission Type	Transmission Type	U8	RW/S	NO	FFh
	03	Inhibit Time	Inhibit Time	U16	RW/S	NO	0
	04	Compatibility Entry	Compatibility Entry	U8	RW	NO	0
	05	Event Timer	Event Timer	U16	RW/S	NO	0
1801h	00	Number of entries	Number of entries	U8	RO	NO	5
	01	COB ID	TPDO1 COB ID	U32	RO	NO	280+Node-ID
	02	Transmission Type	Transmission Type	U8	RW/S	NO	FFh
	03	Inhibit Time	Inhibit Time	U16	RW/S	NO	0
	04	Compatibility Entry	Compatibility Entry	U8	RW	NO	0
	05	Event Timer	Event Timer	U16	RW/S	NO	0
1802h	00	Number of entries	Number of entries	U8	RO	NO	5
	01	COB ID	TPDO2 COB ID	U32	RO	NO	380+Node-ID
	02	Transmission Type	Transmission Type	U8	RW/S	NO	FFh
	03	Inhibit Time	Inhibit Time	U16	RW/S	NO	0
	04	Compatibility	Compatibility Entry	U8	RW	NO	0

		Entry					
	05	Event Timer	Event Timer	U16	RW/S	NO	0
1803h	00	Number of entries	Number of entries	U8	RO	NO	5
	01	COB ID	TPDO3 COB ID	U32	RO	NO	480+Node-ID
	02	Transmission Type	Transmission Type	U8	RW/S	NO	FFh
	03	Inhibit Time	Inhibit Time	U16	RW/S	NO	0
	04	Compatibility Entry	Compatibility Entry	U8	RW	NO	0
	05	Event Timer	Event Timer	U16	RW/S	NO	0
1A00h	00	Number of entries	Number of entries	U8	RO	NO	0
	01	PDO Mapping Entry	Unmapped	U32	RW/S	NO	-
	02	PDO Mapping Entry_2	Unmapped	U32	RW/S	NO	-
	03	PDO Mapping Entry_3	Unmapped	U32	RW/S	NO	-
	04	PDO Mapping Entry_4	Unmapped	U32	RW/S	NO	-
1A01h	00	Number of entries	Number of entries	U8	RO	NO	0
	01	PDO Mapping Entry	Unmapped	U32	RW/S	NO	-
	02	PDO Mapping Entry_2	Unmapped	U32	RW/S	NO	-
	03	PDO Mapping Entry_3	Unmapped	U32	RW/S	NO	-
	04	PDO Mapping Entry_4	Unmapped	U32	RW/S	NO	-
1A02h	00	Number of entries	Number of entries	U8	RO	NO	0
	01	PDO Mapping Entry	Unmapped	U32	RW/S	NO	-
	02	PDO Mapping	Unmapped	U32	RW/S	NO	-

		Entry_2					
	03	PDO Mapping Entry_3	Unmapped	U32	RW/S	NO	-
	04	PDO Mapping Entry_4	Unmapped	U32	RW/S	NO	-
1A03h	00	Number of entries	Number of entries	U8	RO	NO	0
	01	PDO Mapping Entry	Unmapped	U32	RW/S	NO	-
	02	PDO Mapping Entry_2	Unmapped	U32	RW/S	NO	-
	03	PDO Mapping Entry_3	Unmapped	U32	RW/S	NO	-
	04	PDO Mapping Entry_4	Unmapped	U32	RW/S	NO	-
Factory custom parameters							
2000h	00	Driver ode number	Can be set by DIP switch and 0x2008 register	U16	RO	YES	-
2001h	00	Motor status register	Driver controls motor motion 0: motor is stationary; 1: motor running;	U16	RO	YES	0
2002h	00	Motor running speed	Current speed of the motor;	I16	RO	YES	0
2003h	00	Input signal status	4 input signal level status; Bit0 ~ Bit3: X0 ~ X3 input level status;	U16	RO	YES	0
2004h	00	Output signal status	2 output signal level status; Bit0 ~ Bit1: Y0 ~ Y1 output status;	U16	RO	YES	0

2005h	00	Current setting	Value—root mean square value (peak value) 0—0.21A(0.3A); 1—0.35A(0.5A); 2—0.57A(0.8A); 3—0.85A(1.2A); 4—1.10A(1.5A); 5—1.20 A(1.7A); 6—1.34A(1.9A); 7—1.56A(2.2A);	U16	RW/S	YES	6
2006h	00	Subdivision Setting	Address-Subdivision 0—200(Pu/rev); 1—400 (Pu/rev); 2—800 (Pu/rev); 3—1600(Pu/rev); 4—3200(Pu/rev); 5—6400(Pu/rev); 6—12800(Pu/rev); 7—25600(Pu/rev); 8—1000 (Pu/rev); 9—2000(Pu/rev); 10—4000(Pu/rev); 11—5000(Pu/rev); 12—8000(Pu/rev); 13—10000(Pu/rev); 14—20000(Pu/rev); 15—25000(Pu/rev);	U16	RW/S	YES	10
2007h	00	Lock current	0: half flow; 1: full flow;	U16	RW/S	YES	0
2008h	00	Custom drive node number	0 ~ 31: Undefined 32 ~ 127 Use when the node number is greater than 31;	U16	RW/S	YES	0
2009h	00	Custom communication baud rate high	0：1000 Kbit/s 1：500 Kbit/s 2：250 Kbit/s 3：125 Kbit/s 4：100 Kbit/s	U16	RW/S	YES	1

			5：50 Kbit/s 6：25 Kbit/s				
200Ah	00	Limit parking mode	0: stop; 1: emergency stop; 2: invalid;	U16	RW/S	YES	0
200Bh	00	Shaft lock method	0: Not enable, not lock the shaft; 1: Not enable, lock the shaft;	U16	RW/S	YES	0
200Ch	00	Whether the communication write function code value is updated to EEPROM	0: Parameters with attribute RW / S are updated to EEPROM synchronously; 1: Do not update;	U16	RW	YES	0
200Eh	00	Starting speed	The initial speed at which the movement started; Unit r / min; Range 2-300r / min;	U16	RW	YES	5r/min
200Fh	00	Motor enable / release	0: release; 1: enable;	U16	RW	YES	0
2010h	00	0: invalid; 1: fault reset;	0: invalid; 1: Restore factory settings; 2: Save all RW attribute parameters to EEPROM;	U16	RW	YES	0
2011h	00	Fault reset command	0: invalid; 1: fault reset;	U16	RW	YES	0
2012h	00	Clear the current position	Used to clear the current position in absolute position mode 0: invalid; 1: the current position is cleared;				
2030h	00	Number of sub-indexes	Number of sub-indexes	U16	RO	NO	16
	01	Input terminal effective level	Bit0: input terminal X0 control bit; Bit1: input terminal X1 control bit; Bit2: input terminal X2 control bit; Bit3: input terminal X3 control bit; Bit4 ~ Bit15: reserved; 0: default; 1: level inversion; The driver's default input terminal level rising edge or high level is valid;	U16	RW/S	YES	0
	02	Input terminal X0 terminal function selection	0: undefined; 1: origin signal; 2: Positive limit signal; 3: Inverse limit signal; 4: NC; 5: NC; 6: NC; 7: NC; 8: NC; 9: emergency stop	U16	RW/S	YES	0
	03	Input terminal X1 terminal function selection		U16	RW/S	YES	0
	04	Input terminal X2 terminal function selection		U16	RW/S	YES	0
	05	Input terminal X3		U16	RW/S	YES	0

ZLTECH
ZLIM42C Integrated Open Loop Step Motor Manual Version 1.03

		terminal function selection	signal; 10: NC; 11: NC; 12: NC; 13: NC; 14: NC;				
	0C	Output terminal effective level	Bit0: output terminal Y0 control bit; Bit1: Y1 control bit of output terminal; 0: default; 1: level inversion; The driver's default input terminal level rising edge or high level is valid;	U16	RW/S	YES	0
	0D	Output terminal Y0 terminal function selection	0: undefined 1: alarm signal; 2: drive status signal; 3: return to the completion signal; 4: In place signal	U16	RW/S	YES	0
	0E	Output terminal Y1 terminal function selection		U16	RW/S	YES	0
2040h	00	Current loop proportionality factor	Factory default, users do not need to set	U16	RW	YES	-
2041h	00	Current loop integral gain	Factory default, users do not need to set	U16	RW	YES	-
204Bh	00	X0 / X1 input filter time	Factory default, no adjustment is required under normal circumstances	U16	RW/S	YES	-
204Ch	00	X2 / X3 input filter	Factory default, no	U16	RW/S	YES	-

		time	adjustment is required under normal circumstances				
2069h	00	Bus voltage	Unit: V	U16	RO	YES	0
2088h	00	Software version	Factory default	U16	RO	NO	-
CiA 402 Parameter							
603Fh	00	Error_code	Factory-defined drive error conditions. 0000h: no errors; FF01h: overvoltage; FF02h: overcurrent; FF04h: missing phase; FF08h: Internal reference voltage error; FF10h: EEPROM read and write errors;	U16	RO	YES	0
6040h	00	Controlword	Control word	U16	RW	YES	0
6041h	00	Statusword	Status word	U16	RO	YES	0
605Ah	00	Quick_stop_option_code	Driver processing method after quick stop command. 5: Stop normally , maintain quick stop status; 6: Decelerate to stop emergencely and maintain quick stop state; 7: Emergency stop, maintain quick stop state;	I16	RW	NO	5

605Bh	00	Shutdown_option_code	Driver processing method after the close command 0: invalid; 1: Stop normally, go to ready to switch on state;	I16	RW	NO	1
605Ch	00	Disable_operation_option_code	Driver processing mode after the disable operation command 0: Invalid; 1: Stop normally , switch to switched on state;	I16	RW	NO	1
605Dh	00	Halt_option_code	How the driver handles the control word Halt command 0: Normal stop, maintaining Operation Enabled status; 2: Sudden deceleration stop, maintain Operation Enabled state; 3: Emergency stop, maintain Operation Enabled state;	I16	RW	NO	0
6060h	00	Modes_of_operation	0: undefined; 1: position mode; 3: speed mode;	I8	RW	YES	0

			6: Return to origin mode;				
6061h	00	Modes_of_operation_display	0: undefined; 1: position mode; 3: speed mode; 6: Return to origin mode;	I8	RO	YES	0
6064h	00	Position_actual_value	Actual position feedback, unit: pul;	I32	RW	YES	0
606Ch	00	Velocity_actual_value	Current motor speed, Unit: r / min	I32	RW	YES	0
607Ah	00	Target_position	Total number of pulses in position mode; Range: -1000000~1000000;	I32	RW	YES	5000
607Ch	00	Home_offset	Origin offset ; Range: -1000000~1000000	I32	RW	YES	0
6081h	00	Profile_velocity	Speed in position mode; Range: 5-3000r/min;	U32	RW	YES	120r/min
6082h	00	End_velocity	Start / stop speed in position mode; Range: 5-3000r/min;	U32	RW	YES	10r/min
6083h	00	Profile_acceleration	acceleration time; Range: 0-2000ms;	U32	RW	YES	100ms
6084h	00	Profile_deceleration	Deceleration time; Range: 0-2000ms;	U32	RW	YES	100ms
6085h	00	Quick_stop_deceleration	Deceleration time; Range: 0-2000ms;	U32	RW	YES	10ms
6098h	00	Homing_method	17: negative limit	U8	RW	YES	0

ZLTECH
ZLIM42C Integrated Open Loop Step Motor Manual Version 1.03

			mode; 18: Positive limit mode; 24: Forward origin mode; 29: reverse origin mode;				
6099h	00	Homing_speeds_number_of_entries	Number of sub-indexes	U8	RO	NO	2
	01	Homing_speeds_Speed_during_search_for_switch	Running speed when querying the origin position; Range: 5-3000 r/min;	U32	RW	YES	120r/min
	02	Homing_speeds_Speed_during_search_for_zero	Return speed after querying the origin; Range: 5-3000r/min	U32	RW	YES	60 r/min
609Ah	00	Homing_acceleration	acceleration/ deceleration time; Range: 30-2000ms	U32	RW	YES	100ms
609Ah	00	Homing_acceleration	acceleration/ deceleration time; Range: 30-2000ms	U32	RW	YES	100ms
60FFh	00	Target_velocity	Target speed in speed mode; Range: -3000-3000r/min;	I32	RW	YES	0

Note:

- U16 means unsigned 16 bits; I16 means signed 16 bits; U32 means unsigned 32 bits; I32 means signed 32 bits.